P430 Series

Glass Tube Variable Area Flow Meter

Parker P Series glass tube flowmeters deliver unsurpassed performance and value in a wide variety of gas and liquid applications.

P430 Series flow meters feature borosilicate glass tubes with stainless steel frames and horizontal connections and are available with 65mm and 150mm scale sizes.

Integrated metering valves, provide the needed versatility for many industrial process and sample handling applications.

Contact Information:

Parker Hannifin Corporation
Porter Instrument Division
245 Township Line Road
Hatfield, PA 19440

phone 215 723 4000
fax 215 723 2199
Industrial@parker.com

www.parker.com/porter

Product Features and Options:

- Borosilicate glass metering tube
- Max temperature: 248°F (120°C)
- Max Pressure: 116 PSIG (see specifications)
- Certified calibrations conforming to ISA RP 16.6 available
- Direct reading detachable scales available in any volumetric unit

Parker Porter

ENGINEERING YOUR SUCCESS.

Specifications

Materials

Metering Tube	Borosilicate Glass
Internal Components	316L Stainless Steel, Black Glass, Ruby
Inlet/Outlet Fittings	1/4" FNPT, Horizontal Control Valve Optional
Fitting Material	316L Stainless Steel
Elastomers	Standard: Fluorinated Propylene Monomer (FPM/FKM)

Options

Certified Calibrations	Conform to ISA RP 16.6
Scales	Can be produced in any volumetric unit

Performance

Capacities	Water .72 to 2,500 cc/mn Air 66 to 60,000 cc/mn
Scale	65mm, 150mm Direct reading, detachable
Accuracy	65mm ±5% of Full Scale Flow 150mm ±3% of Full Scale Flow
Turndown	10:1 to 12.5:1, unless otherwise indicated
Repeatability	1%
Maximum Temperature	248°F (120°C)
Maximum Pressures	116 PSIG
Ambient Temperature	33°F to 125°F (1°C to 52°C)

Dimensions

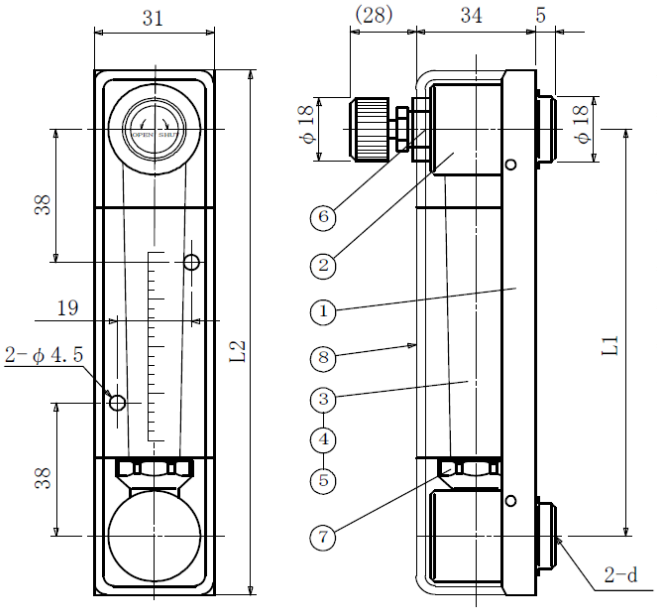

No.	Parts Description	Material	Material
1	Support Plate	SUS304	SUS304
2	End Fitting	SUS304	SUS316
3	Metering Tube	Pyrex Glass	Pyrex Glass
4	Float		
5	Packing	FPM	FPM
6	Needle Valve	SUS316	SUS316
7	Spindle	SUS316	SUS316
8	Cover	Polycarbonate	Polycarbonate

Model	Dimension	L1 (mm)	L2 (mm)
P430 - 65	Rc 1/4	114	146
P430 - 65	NPT 1/4 (F)		
P430 - 15	Rc 1/4	224	256
P430 - 15	NPT 1/4 (F)		

Standard Flow Rate Table

Air[1]	Water[2]
80 - 800 mL/min (nor)	5 - 50 mL/min
0.1 - 1 L/min (nor)	
0.2 - 2 L/min (nor)	10 - 100 mL/min
0.3 - 3 L/min (nor)	20 - 200 mL/min
0.5 - 5 L/min (nor)	30 - 300 mL/min
1 - 10 L/min (nor)	50 - 500 mL/min
2 - 20 L/min (nor)	0.1 - 1 L/min
3 - 30 L/min (nor)	
5 - 50 L/min (nor)	0.15 - 1.5 L/min
6 - 60 L/min (nor)	0.2 - 2 L/min
	0.25 - 2.5 L/min

[1] Gases equivalent to Air @ 0°C 1 atmos (Normal)
[2] Liquid equivalent to water density 1.0 g/cm³, viscosity 1.0cp

Ordering Information

Use the following guide to determine the specific product number you require.

The following example describes a P430 series flow meter, with 65MM tubes, 316 SS - 1/4" FNPT fitting material; FPM O-ring; millimeter scale, inlet 316L SS valve, no alarm.

Example: P43065X13410

Model Number, Example and Options								Description
P430	**65**	**X**	**1**	**3**	**1**	**1**	**0**	
Tube Number	65							65MM Tubes
	15							150MM Tubes
Other		X						Glass
Fitting Material			1					316L SS – 1/4" FNPT
O-Ring Material				3				Fluorinated Propylene Monomer (FPM/FKM)
Scale Type					1			Millimeter
					2			GPH Water @ 70°F (21°C)
					3			LPH Water @ 70°F (21°C)
					4			CC/MIN Water @ STP
					5			SCFH Air @ STP
					6			SLPH Air @ STP
					7			SCCM Air @ STP
					8			Non-Standard
Valve Option						1		Inlet 316L SS
						2		Outlet 316L SS
						3		No Valve
Optional Alarm Switch							0	No Alarm

⚠ WARNING – USER RESPONSIBILITY

FAILURE OR IMPROPER SELECTION OR IMPROPER USE OF THE PRODUCTS DESCRIBED HEREIN OR RELATED ITEMS CAN CAUSE DEATH, PERSONAL INJURY AND PROPERTY DAMAGE.

This document and other information from Parker-Hannifin Corporation, its subsidiaries and authorized distributors provide product or system options for further investigation by users having technical expertise.

The user, through its own analysis and testing, is solely responsible for making the final selection of the system and components and assuring that all performance, endurance, maintenance, safety and warning requirements of the application are met. The user must analyze all aspects of the application, follow applicable industry standards, and follow the information concerning the product in the current product catalog and in any other materials provided from Parker or its subsidiaries or authorized distributors.

To the extent that Parker or its subsidiaries or authorized distributors provide component or system options based upon data or specifications provided by the user, the user is responsible for determining that such data and specifications are suitable and sufficient for all applications and reasonably foreseeable uses of the components or systems.

Offer of Sale

The items described in this document are hereby offered for sale by Parker-Hannifin Corporation, its subsidiaries or its authorized distributors. This offer and its acceptance are governed by the provisions stated in the detailed “Offer of Sale” elsewhere in this document or available at www.parker.com/offerofsale.

© 2013 Parker Hannifin Corporation

FM-1159, Rev E July 2013

Parker Porter

ENGINEERING YOUR SUCCESS.